WirelessUSB LS™ Radio Module

1.0 Features

- The CYWM6934 LS™ 2.4-GHz DSSS Radio SoC Module includes radio (CYWUSB6934), antenna, and all external components
- Complete Radio Module with PCB Trace Antenna
- Operates in the unlicensed Industrial, Scientific, and Medical (ISM) band (2.4 GHz–2.483 GHz)
- –90-dBm receive sensitivity
- Up to 0-dBm output power
- Range of up to 10 meters or more
- Data throughput of up to 62.5 kbits/sec
- SPI microcontroller interface (up to 2 MHz data rate)
- Operating voltage from 2.7V to 3.6V
- Small PCBA Design: 0.975” (24.38 mm) by 0.65” (16.25 mm) by 0.212” (5.3 mm) (L x W x H)
- FCC Modular Approval Grant to meet FCC Part 15, EN 300 328-1, EN 301 489-1, and Industry Canada RSS-210 standards
- An FCC Module Approval (MA) Grant provides customers significant cost savings, by allowing customers to adopt the CYWM6934 FCC ID into their own products

2.0 Functional Description

The CYWM6934 WirelessUSB LS™ Radio Module offers a complete radio module solution for integration into existing or new 2.4-GHz products.

The CYWM6934 is tested for functional operation and is FCC/ETSI(EU)/Industry pre-certified. The module is supplied with an integrated PCB trace antenna.

The CYWM6934 is available in a small PCBA design and can be mounted horizontally to the device PCB via a 12-pin header. The pin-out of the header is shown in *Figure 5-1*.

3.0 Applications

- PC Human Interface Devices (HID)
  - Mice
  - Keyboards
  - Joysticks
- Peripheral Gaming Devices
  - Game Controllers
  - Console Keyboards
- General
  - Presenter Tools
  - Remote Controls
  - Consumer Electronics
  - Barcode Scanners
  - POS Peripherals
  - Toys

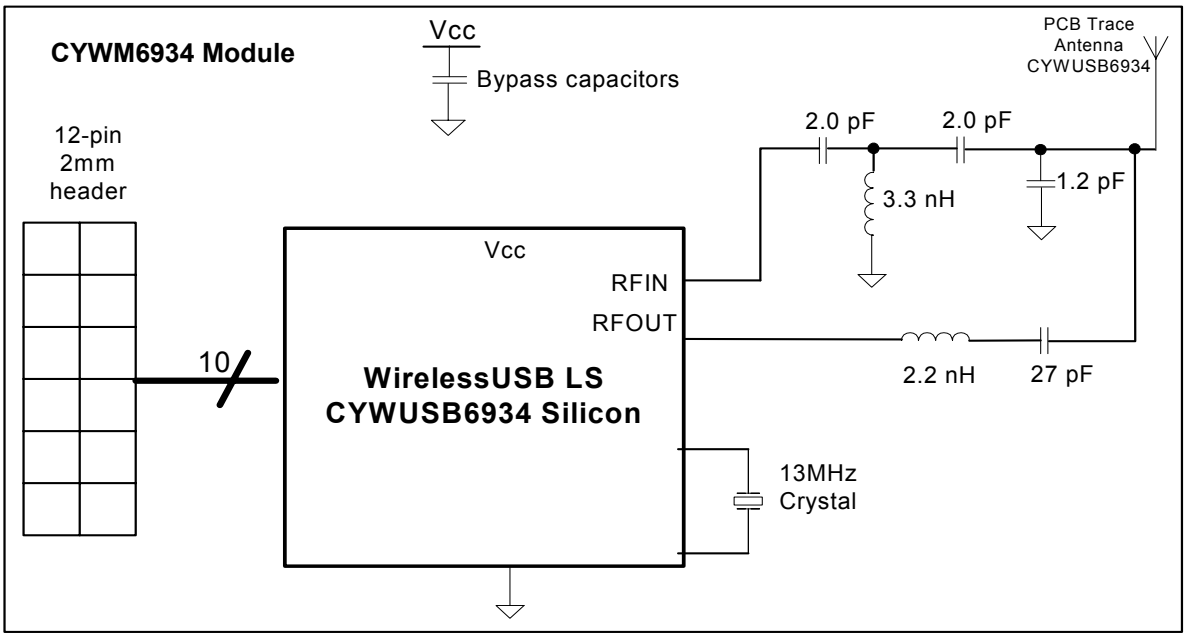

[+] Feedback

3.1 Reference Documentation

For information on technical details of the WirelessUSB LS™ 2.4-GHz DSSS Radio SoC such as register settings, timing, application interfaces, clocking, and power management, refer to the data sheet of the CYWUSB6934 Radio SoC.

3.2 Applications Support

The CYWM6934 is available as a reference design, complete with PCB layout files, schematics, and a bill of materials. The CYWM6934 can be used with the CY3635 WirelessUSB N:1 sensor development kit, and the CY3632 WirelessUSB LS development kit via a 1 x 14 adaptor board.

4.0 Module Certification Details

4.1 Eligibility Requirements for Regulatory Module Approval

The CYWM6934 LS™ Radio Module is a device that transmits and receives radio signals in accordance with the spectrum regulations for the 2.4-GHz unlicensed frequency range. Regional regulatory agency approval may be required to operate CYWM6934 throughout the world.

Cypress Semiconductor Corporation has obtained regulatory approvals for the CYWM6934 to be used in specific countries. CYWM6934 was approved under the “Modular Approval (MA) Grant”. This certification represents a significant cost savings to the OEM.

The MA Grant provides that device manufacturers who incorporate CYWM6934 as tested and approved can be relieved from having to perform the Radio Regulatory certification portion of the respective agency certification.

The MA Grant is valid only in countries[1.] that recognize the MA Grant certification process; the USA, Canada, Belgium, Denmark, France, Finland, Germany, Italy, Netherlands, Spain, Sweden, UK.

In order to be able to take advantage of Cypress’s modular certification in an end product, the following must be ensured:

1.) Correct Application

2.) Correct Installation

3.) Correct labeling

4.1.1 Correct Application:

There are three types of application considered for wireless modules and the LS has been verified to work with all three application types at pre-certified power output levels. However, other usages are possible with re-certification. The application types are defined as follows

4.1.1.1 Fixed Application:

Module is in a permanent location and has atleast 2m separation from the human body.

4.1.1.2 Mobile Application:

Module can be relocated and will have atleast 20cm separation from the human body.

Note:

1. This list is as of march 2006. Please talk to your local Sales person for the current list.

4.1.1.3 Portable Application:

Module can be relocated and will have less than 20cm separation from human body.

4.1.2 Correct Installation:

- Modules cannot be modified in any way
- Modules must be used only in the operating range specified in the datasheets
- Modules cannot be co-located within 20cm of another intentional radiator in the system
- Must guarantee that end user cannot easily change antenna

Note: Sidestepping these requirements is possible with additional testing and/or recertification. However, modular approval would no longer apply.

4.1.3 Correct Labeling:

If end device containing a WirelessUSB LS Module will be sold or used in the USA, the enclosure of the product must display a label with the following basic elements:

CYWM6934

FC
Contains FCC ID: R8KUGWM1USHN33A

If end device containing a WirelessUSB LS Module will be sold or used in Europe, the enclosure of the product must display a label with the following basic elements:

CYWM6934

CE 0122 ⓘ

If end device containing a WirelessUSB LS Module will be sold or used in Canada, the enclosure of the product must display a label with the following basic elements:

CYWM6934

This product contains Cypress WirelessUSB module
Canadian Cert No IC: 5125A-UGWM1US

As of March 2006, Japan does not recognize the “Modular Approval” certification. Regulatory certification for Japan (TELEC) must be acquired through typical approval procedures. These approvals are the sole responsibility of the OEM.

Note:

Even with modular approval, the end device still has to be tested for digital emissions compliance with all agencies as an electronic device. The modular approval only eliminates the need to test for compliance on RF transmissions.

[+] Feedback

4.2 User Guide Information

Electronic device manufacturers using Cypress's Modular Approval are required to follow the below mentioned labeling practice on the container in which the device is marketed or in the product user's guide. This should be in accompaniment with other regulatory information. The text may be disbursed according to language or geographic regions if desired, but the exact text shown below must be maintained.

4.2.1 United States of America requirements:

The device shall bear the following statement in a conspicuous location:

"This device complies with part 15 of the FCC rules. Operation is subject to the following two conditions: (1) This device may not cause harmful interference, and (2) this device must accept any interference received, including interference that may cause undesired operation".

When the device is so small or for such use that it is not practical to place the statement specified under paragraph (a) of this section on it, the information required by this paragraph shall be placed in a prominent location in the instruction manual or pamphlet supplied to the user or, alternatively, shall be placed on the container in which the device is marketed. However, the FCC identifier or the unique identifier, as appropriate, must be displayed on the device.

The users manual or instruction manual for an intentional or unintentional radiator shall bear the following cautionary statement:

Caution: Changes or modifications not expressly approved by the party responsible for compliance could void the user's authority to operate the equipment."

4.2.1.1 United States Regulatory Approval FCC Modular Approval (MA)

The requirements for FCC Modular Approval were released in June 2000 in the FCC's Public Notice: FCC Public Notice DA 00-1407, Part 15 Unlicensed Modular Transmitter Approvals.

Criteria for Modular Approval

In our OEM instructions it is recommend that the following rules (required by FCC grants) be adhered to.

• Cypress FCC ID label must appear on the outside of their product. FCC Public Notice DA 00-1407 instructs, "...if the FCC ID is not visible when the module is installed inside another device, then the outside of the device into which the module is installed must also display a label referring to the enclosed module. This exterior label can use wording such as the following: "Contains Transmitter Module FCC ID: XYZMODEL1" or "Contains FCC ID: XYZMODEL1." Any similar wording that expresses the same meaning may be used."

• No co-location with other transmitters is allowed. By definition, co-location is when another radio or its antenna is located within 20 cm of our radio and it can transmit simultaneously with your radio. Only the antenna(s) that were certified with your radio may be used. Other antennas may be used only if they are of the same type (e.g. yagi, dipole, patch) and have the same or lower gain.

• Not withstanding the Modular Approval for the Radio Device with associated interconnect and antennae, the end product configuration must meet digital emissions compliance and must be tested in accordance with FCC Part 15 requirements confirming radiated emissions are within specified limits. Applicable sections include:

- Part 15 Section 15.109 Sub-paragraph A, Class B Radiated Emission Limits

These emissions tests can be conducted by the manufacturer or by contacting an approved test facility equipped and certified accordingly. The results of these emissions tests are not required to be submitted to the FCC or Cypress, but should be kept on file by the OEM.

• Cypress module can only be installed by the OEM and not by the user. It should not be installed in a user accessible location.

• Any modifications to the radio will void the user's authority to operate the equipment. The OEM must not modify any aspect of the radio's mechanical and electrical configuration.

• The OEM must include compliance information in their user information.

• Although no additional regulatory work may be required for the radio, the host device is probably subject to other FCC authorizations as a digital device. DoC authorization is required for PCs and peripherals; verification is required for most other digital devices.

Product Labeling Requirements

FCC product labeling requirements stipulate an FCC label, including specific text, be placed on the device containing the CYWM6934 module. The product label must include the following text and must be affixed to the exterior of the OEM's product. (As shown in the 'Correct Labeling' section 4.1.3)

4.2.2 Industry Canadian Requirements and Regulatory Approval

Industry Canada regulatory approval typically conforms to the FCC in terms of emission levels and other regulatory requirements. It is the position of the Industry Canada agency that the OEM primarily responsibility for ensuring end product compliance. Cypress (Unigen) as grantee and supplier of the module maintains responsibility for the Modular Approved design.

Criteria for Modular Approval

In our OEM instructions it is recommend that the following rules (required by Industry Canada) be adhered to.

• Cypress Industry Canada ID label must appear on the outside of their product.If the Industry Canada ID is not visible when the module is installed inside another device, then the outside of the device into which the module is installed must also display a label referring to the enclosed module. This exterior label can use wording such as the following: "Contains Transmitter Module Canadian Cert No IC: XYZMODEL1" or "Contains Canadian Cert No IC: XYZMODEL1." Any similar wording that expresses the same meaning may be used.

• No co-location with other transmitters is allowed. By definition, co-location is when another radio or its antenna is located within 20 cm of our radio and it can transmit simultaneously with your radio. Only the antenna(s) that were certified

[+] Feedback

with your radio may be used. Other antennas may be used only if they are of the same type (e.g. yagi, dipole, patch) and have the same or lower gain.

• Notwithstanding the Modular Approval for the Radio Device with associated interconnect and antennae, the end product configuration must meet digital emissions compliance and must be tested in accordance Industry Canada RSS-210 (Low Power License-Exempt Radio communication Devices) requirements confirming radiated emissions are within specified limits. Applicable sections include:

- Part 15 Section 15.109 Sub-paragraph A, Class B Radiated Emission Limits

These emissions tests can be conducted by the manufacturer or by contacting an approved test facility equipped and certified accordingly. The results of these emissions tests are not required to be submitted to Industry Canada or Cypress, but should be kept on file by the OEM.

• Cypress module can only be installed by the OEM and not by the user. It should not be installed in a user accessible location.

• Any modifications to the radio will void the user's authority to operate the equipment. The OEM must not modify any aspect of the radio's mechanical and electrical configuration.

• The OEM must include compliance information in their user information.

• Although no additional regulatory work may be required for the radio, the host device is probably subject to other FCC authorizations as a digital device. DoC authorization is required for PCs and peripherals; verification is required for most other digital devices.

Note:

Industry Canada generally follows the guidelines of the FCC for emissions level requirements. FCC end-product compliance certification results may be used to satisfy Industry Canada requirements. Please consult the Industry Canada, RSS 210 specifications to confirm interagency compliance. If comparable FCC testing has not been performed or if the specifications are not cross compliant, RSS 210 testing will be required.

Product Labeling Requirements

Industry Canada product labeling requirements stipulate specific text be placed on the device containing the CYWM6934 module. The product label must include the following text and must be affixed to the exterior of the OEM's product. (As shown in the 'Correct Labeling' section 4.1.3)

4.2.3 European Union Requirements and Regulatory Approval

The requirements for EU Regulatory Approval were released in April 2000 in the EU R&TTE Directive.

This directive supports self directed testing and certification for "harmonized" bands within OEM facilities or by third party. In the case of WirelessUSB, standards have become harmonized (although frequencies are not). The R&TTE directive no longer requires a Technical Construction File however; frequency notification to EU countries is still applicable.

Article 6 of the R&TTE directive states: "The manufacturer or the person responsible for placing the apparatus on the market provides information for the user on the intended use of the apparatus, together with the declaration of conformity to the essential requirements."

Ensuring regulatory compliance of the end product is the sole responsibility of the OEM.

Cypress maintains responsibility for conformance of the CYWM6934, the interconnect, and the antennae as the manufacturer.

The R&TTE directive maintains that first level compliance be reviewed by a "Notified Body" prior to general product marketing. This is not mandatory, but reduces the risk of the product being challenged for non-compliance. Although not specifically stated in the R&TTE Directive, corrections of non-compliance issues are the responsibility of the end product manufacturer.

Criteria for Modular Approval

In our OEM instructions it is recommend that the following rules (required by ETSI) be adhered to.

• No co-location with other transmitters is allowed. By definition, co-location is when another radio or its antenna is located within 20 cm of our radio and it can transmit simultaneously with your radio. Only the antenna(s) that were certified with your radio may be used. Other antennas may be used only if they are of the same type (e.g. yagi, dipole, patch) and have the same or lower gain.

• The end-product configuration must meet digital emissions compliance and must be tested in accordance with the European Union standards ETSI 300 328 (European Telecommunications Standard for 2.4 GHz ISM band Emissions) and ETSI 300 826 (Electromagnetic Compatibility).

Detailed European Union regulatory standards documents may be obtained from the url:

http://europa.eu.int/comm/enterprise/rtte/infor.htm

These emissions tests can be conducted by the manufacturer or by contacting an approved test facility equipped and certified accordingly. The results of these emissions tests are not required to be submitted to the ETSI or Cypress, but should be kept on file by the OEM.

• Cypress module can only be installed by the OEM and not by the user. It should not be installed in a user accessible location.

• Any modifications to the radio will void the user's authority to operate the equipment. The OEM must not modify any aspect of the radio's mechanical and electrical configuration.

• The OEM must include compliance information in their user information.

• Although no additional regulatory work may be required for the radio, the host device is probably subject to other FCC authorizations as a digital device. DoC authorization is required for PCs and peripherals; verification is required for most other digital devices.

Note:

The European Union generally follows the guidelines of the FCC for emissions level requirements. FCC end-product compliance certification results, if available, may be used to satisfy EU requirements (Substitution Method). Please consult the ETSI 300 328 specifications to confirm inter-agency compliance. If comparable FCC testing has not been performed or if the specifications are not cross compliant, ETSI 300 328 testing will be required. Additionally, testing to

[+] Feedback

the ETSI 301 489-17 (immunity testing) is strongly recommended. Cypress assumes no responsibility for compliance of the end-product configuration.

Product Labeling Requirements

European Union product labeling requirements stipulate specific text be placed on the device containing the CYWM6934 module. The product label must include the following text and must be affixed to the exterior of the OEM's product. (As shown in the 'Correct Labeling' section 4.1.3). This same information may be included in the product user manual, however this is not mandatory. Packaging and user documentation must indicate the use restrictions of the end-product (i.e. countries disallowing the operating frequencies of the CYWM6934).

Note:

The end-product must be labeled "CE" and to the right of the CE mark, the label should have '!' with a circle around it. The exclamation mark designates a non-harmonized frequency band.

5.0 Pin Definitions

Table 5-1. Pin Description Table for the CYWM6934

Pin QFN	Name	Direction	Description
1	GND	–	Ground
2	VCC	–	Supply voltage for the entire Radio Module (2.7V-3.6V). It is recommended that 3.3V be used for most applications.
3	IRQ	Output	Interrupt signal from Radio Module to the MCU
4	nRESET	Input	Active low reset signal from MCU to Radio Module
5	MOSI	Input	Master out, slave in SPI signal from MCU to Radio Module
6	nSS	Input	Active low slave select signal from MCU to Radio Module
7	SCK	Input	SPI clock from MCU to Radio Module
8	MISO	Output	Master in, slave out SPI signal from Radio Module to MCU
9	GND	–	Ground
10	nPD	Input	Active low power-down signal from MCU to Radio Module
11	N/C	–	No connect—leave open
12	N/C	–	No connect—leave open

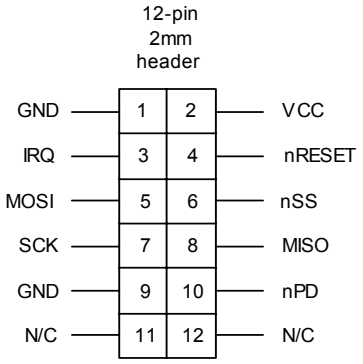

Figure 5-1. CYWM6934 Header Pin-out

[+] Feedback

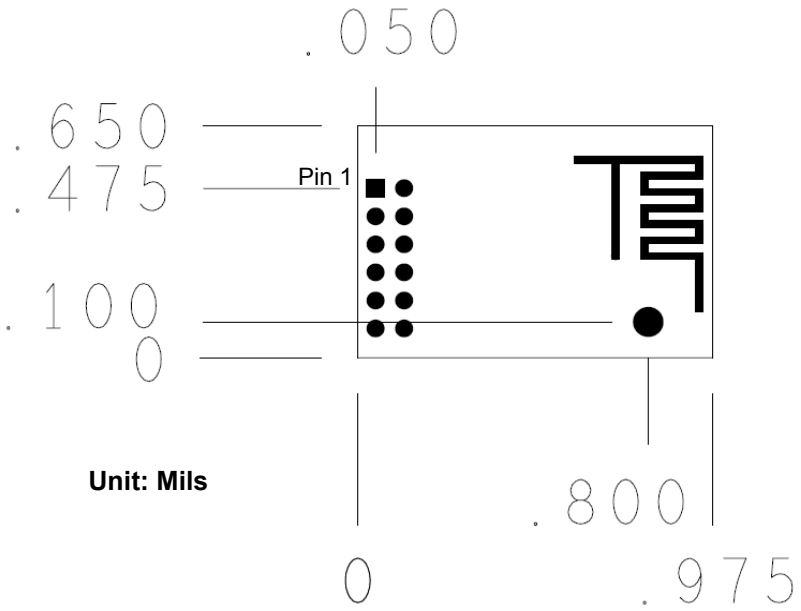

Figure 5-2. CYWM6934 Mechanical Drawing

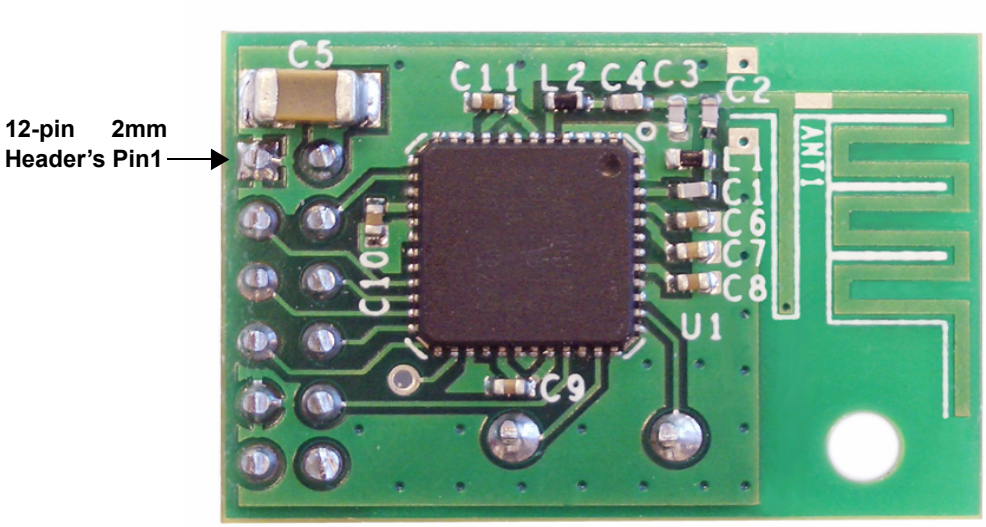

Figure 5-3. CYWM6934 Top View

[+] Feedback

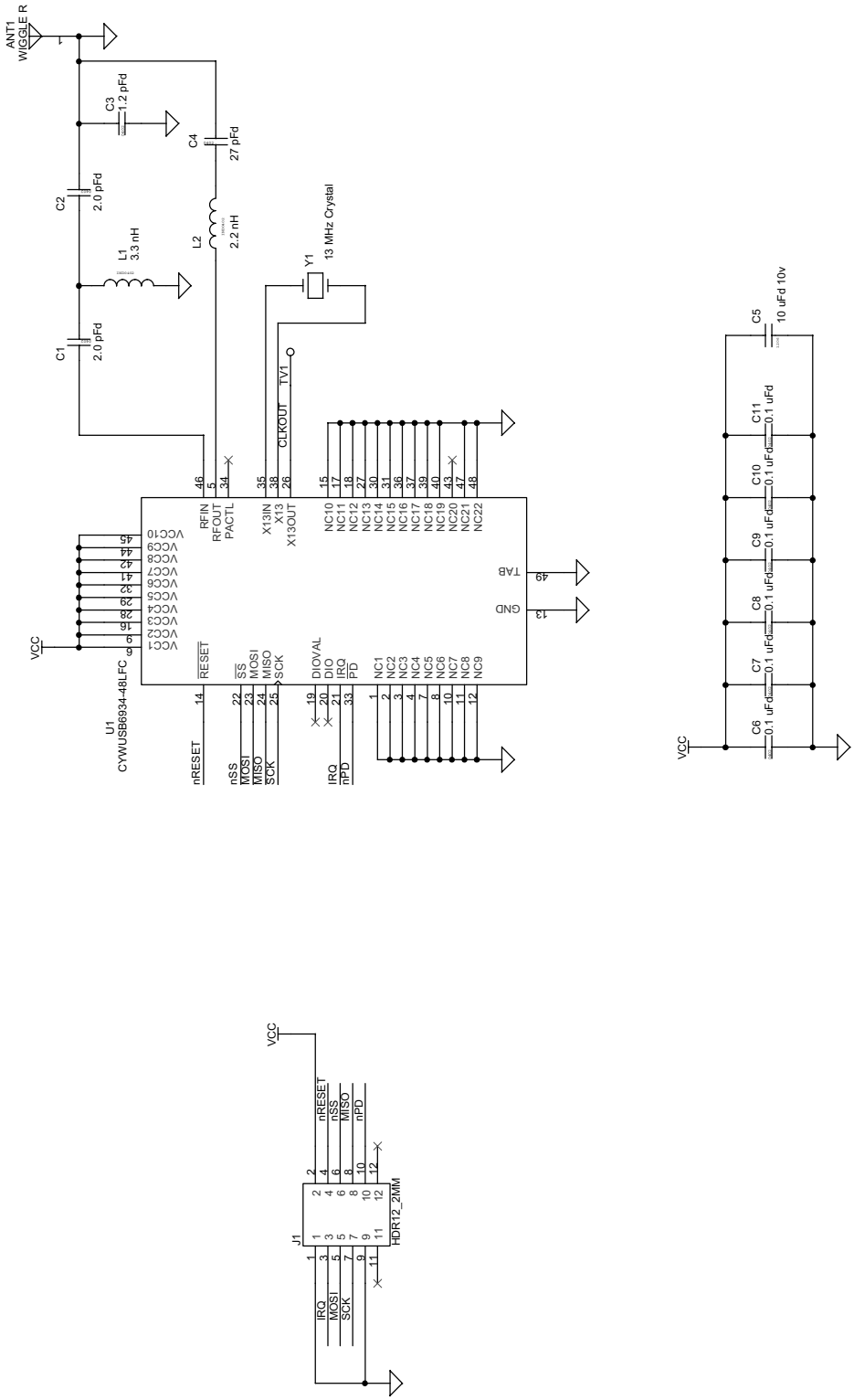

Figure 5-4. CYWM6934 Schematic

[+] Feedback

6.0 Ordering Information

Table 6-1. Ordering Information

Part Number	Radio	Package Name	Package Type	Operating Range
CYWM6934	Transceiver Module	N/A	N/A	Commercial

This document is subject to change, and may be found to contain errors of omission or changes in parameters. For feedback or technical support regarding Cypress WirelessUSB products please contact Cypress at www.cypress.com. WirelessUSB LS is a trademark of Cypress Semiconductor Corporation. All product and company names mentioned in this document are the trademarks of their respective holders.

[+] Feedback

Document History Page

Document Title: CYWM6934 WirelessUSB LS™ Radio Module Document Number: 38-16012				
REV.	**ECN NO.**	**Issue Date**	**Orig. of Change**	**Description of Change**
**	329977	See ECN	BON	New data sheet
*A	508598	See ECN	UYR	Added 'Modular Certification' details - For the USA, the EU and Canada.

© Cypress Semiconductor Corporation, 2005. The information contained herein is subject to change without notice. Cypress Semiconductor Corporation assumes no responsibility for the use of any circuitry other than circuitry embodied in a Cypress product. Nor does it convey or imply any license under patent or other rights. Cypress products are not warranted nor intended to be used for medical, life support, life saving, critical control or safety applications, unless pursuant to an express written agreement with Cypress. Furthermore, Cypress does not authorize its products for use as critical components in life-support systems where a malfunction or failure may reasonably be expected to result in significant injury to the user. The inclusion of Cypress products in life-support systems application implies that the manufacturer assumes all risk of such use and in doing so indemnifies Cypress against all charges.

[+] Feedback